MA-ZER BLA-ZER*

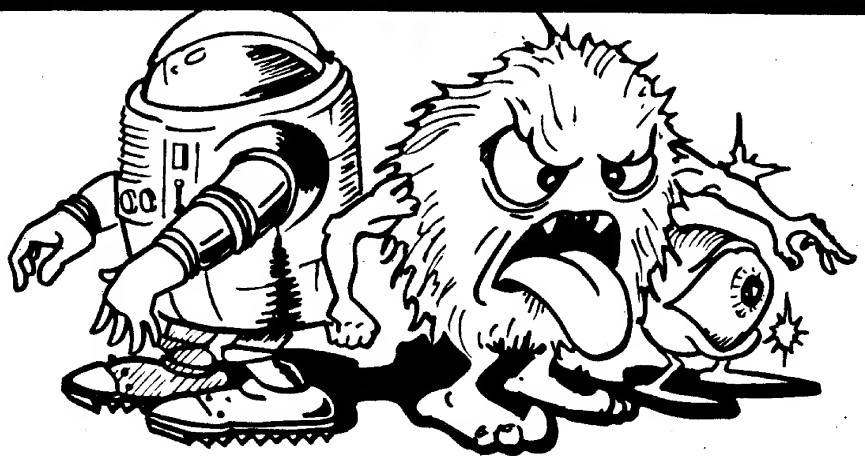

INSTALLATION & OPERATION

* Designed by Stern, Inc., Manufactured under license by Atari, Inc.

MB. TM—001 Rev. 3

ATARI®

ATARI IRELAND LTD.
TIPPERARY TOWN
IRELAND

062-52155. Telex. 28165.

SECTION I: GAME DESCRIPTION

The object of the game is to prevent the attacking aliens from working through the maze and entering your ship. Each time an alien enters your ship, you lose a life.

There are (14) different types of aliens in Mazer Blazer. Each level will have 1 or 2 different types of aliens that present the player with constantly changing levels of difficulty.

Shoot the aliens using the rapid fire Mazer Blaster. The farther from the ship you shoot the aliens, the higher the point value awarded. The screen is divided into four (4) colors. The colors determine the point value of the object. Blue = 400 points, Green = 300 points, Red = 200 points, and Black = 100 points.

The walls of the maze are in two (2) different colors; grey and orange. Orange walls are indestructable, while the grey walls can be shot away either by the nasties on the screen or your Mazer Blaster. Shooting the grey walls leaves gaps in the maze and makes it easier for the aliens to reach their ship, and lowers your wall bonus.

The Wall Bonus (indicated at the top of the screen) starts out at 2,000 points for the first level and increases by 1,000 points per level to a maximum of 13,000 points. Each time a section of the maze is destroyed, your wall bonus decreases by 200 points.

After each level is a Timed Bonus Rack. There are 8 aliens per bonus rack, each worth 500 points. Shoot the aliens as fast as possible for maximum bonus. The aliens seen in the bonus rack will be the alien encountered in the next maze level.

In every maze is the freeze target (located at the lower center of the screen). The freeze target, when hit, momentarily stops the movement of the aliens on the screen (time stopped is adjustable). The number of freezes the game starts with is adjustable from 1 to 4. (See Dip Switch Chart) Extra freezes awarded at Freeze Level (See Dip Switch Chart for Adjustment).

DESCRIPTION OF ALIENS (In their order of appearance).

Tongue	-	Seeks the ship
Disc	-	Seeks the ship
Robot	-	Seeks the ship
Hopper	-	Hops over walls
Eyeball	-	Randomly blinks, making themselves almost invisible
Jack	-	Seeks the ship
Ram	-	Seeks the ship
Snake	-	Seeks the ship
Looper	-	Small target which is constanly spinning
Drill	-	Drills into ground and comes up in a different part of the maze.
Shield	-	Opens and closes. When the shield is closed, it can't be hit.
Bridger	-	Builds bridges that it and other aliens go under. When under bridges, aliens can't be shot.

SPECIAL NUISANCE ALIENS

Jaws	-	Appear randomly in different levels. The jaws eat walls and decrease your wall bonus.
Gunners	-	Appear randomly in different levels. The gunners shoot walls and decrease your wall bonus.

SECTION II: GAME ADJUSTMENTS

All dip switches used for game adjustments are located on the ZPU-2000 board. The ZPU-2000 board is the bottom board in the card cage.

ZPU-2000 DIP SWITCH DESIGNATION

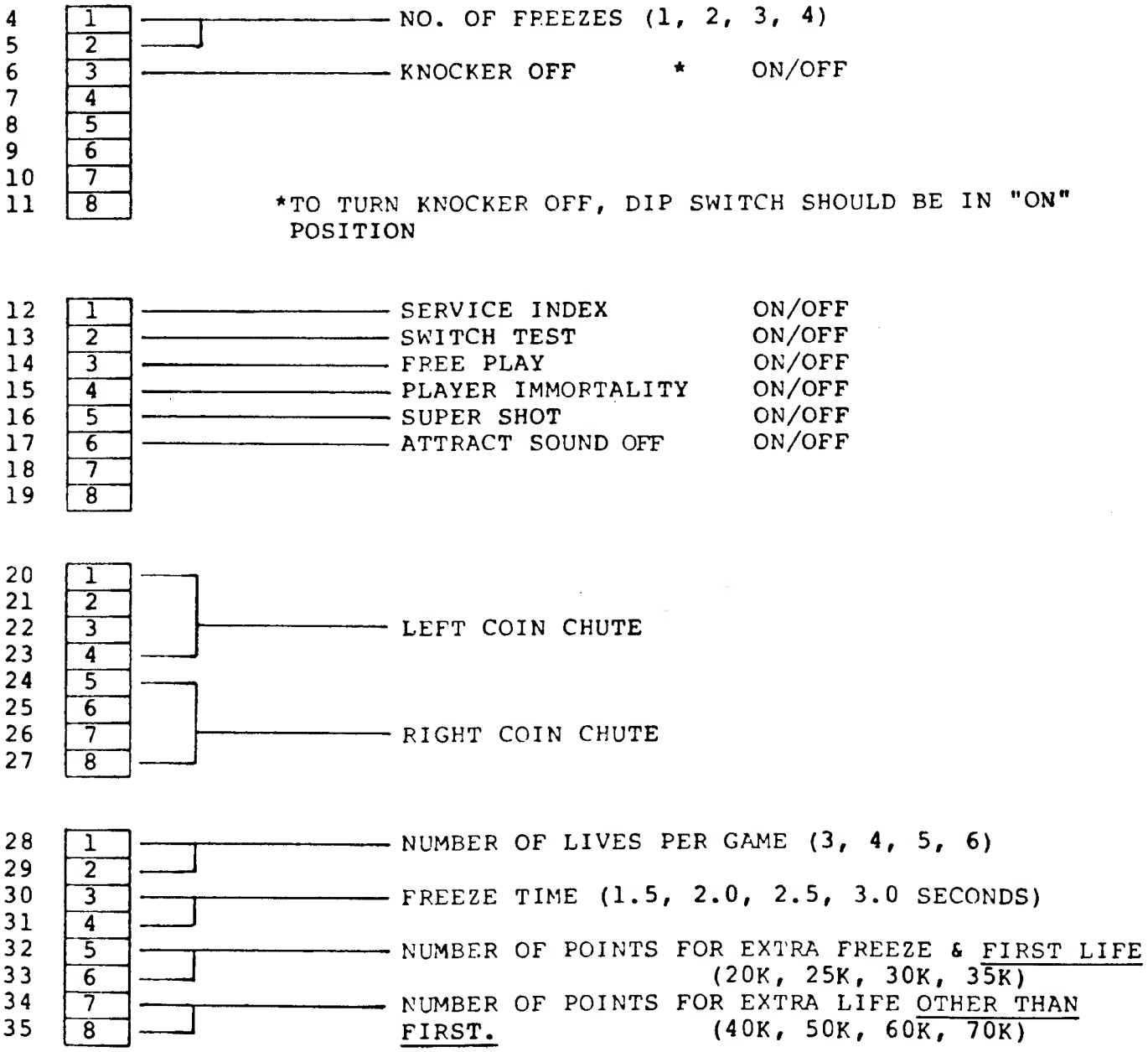

NUMBER OF FREEZES:

NUMBER	SWITCH 4	SWITCH 5
1	OFF	OFF
2	ON	OFF
3	OFF	ON
4	ON	ON

GUN KNOCKER	DIP SWITCH 6
ON	OFF
OFF	ON

FREE PLAY	DIP SWITCH 14
YES	ON
NO	OFF

PLAYER IMMORTALITY	DIP SWITCH 15
YES	ON
NO	OFF

Used for test purposes, in this mode your player is never destroyed.

SUPER SHOT	DIP SWITCH 16
YES	ON
NO	OFF

Used for test purposes, in this mode pushing the Player One button clears all aliens visible on the screen at the time. More than one push may be needed to clear all aliens from a level.

ATTRACT MODE SOUND OFF	DIP SWITCH 17
ON	OFF
OFF	ON

NUMBER OF LIVES PER GAME:

LIVES	SWITCH 28	SWITCH 29
3	OFF	OFF
4	ON	OFF
5	OFF	ON
6	ON	ON

FREEZE TIME:

TIME	SWITCH 30	SWITCH 31
1.5	OFF	OFF
2.0	ON	OFF
2.5	OFF	ON
3.0	ON	ON

NUMBER OF POINTS FOR EXTRA FREEZE AND FIRST LIFE:

POINTS	SWITCH 32	SWITCH 33
20K	OFF	OFF
25K	ON	OFF
30K	OFF	ON
35K	ON	ON

This switch setting awards extra freezes at the point value set and multiplies thereof. This switch setting also awards First Extra Life Only. (To set the next level, see Switch Settings Below).

NUMBER OF POINTS FOR EXTRA LIFE OTHER THAN FIRST:

POINTS	SWITCH 34	SWITCH 35
40K	OFF	OFF
50K	ON	OFF
60K	OFF	ON
70K	ON	ON

This switch setting awards subsequent lives. It awards extra lives by adding the point value set to the Previous Fxtra Life Value. Fxample: First Life set at 20,000 points, Second Life set at 50,000 points. Then the first life awarded will be at 20,000 points, the second life awarded at 70,000 points, the third at 120,000 points, etc.

COIN SWITCH SETTINGS:

COIN	SWITCHES			
LEFT CHUTE	23	22	21	20
RIGHT CHUTE	27	26	25	24

				CREDITS	COIN
OFF	OFF	OFF	OFF	1	
OFF	OFF	OFF	ON	2	
OFF	OFF	ON	OFF	3	
OFF	OFF	ON	ON	4	
OFF	ON	OFF	OFF	5	1
OFF	ON	OFF	ON	6	
OFF	ON	ON	OFF	7	
OFF	ON	ON	ON	10	
ON	OFF	OFF	OFF	14	

COIN	SWITCHES			
LEFT CHUTE	23	22	21	20
RIGHT CHUTE	27	26	25	24

						SEQUENCE OF CREDITS PER COIN			
				CREDITS	COIN	1	2	3	4
ON	OFF	OFF	ON	1	2	0	1		
ON	OFF	ON	OFF	3	2	1	2		
ON	OFF	ON	ON	5	2	0	5		
ON	ON	OFF	OFF	7	2	0	7		
ON	ON	OFF	ON	3	4	0	1	0	2
ON	ON	ON	OFF	5	4	1	1	1	2
ON	ON	ON	ON	7	4	1	2	1	3

IF BOTH COIN CHUTES ARE ADJUSTED THE SAME FOR MULTIPLE COINS, CREDITS WILL INCREASE AS IF DROPPED IN SAME CHUTE.

SECTION III: SERVICE MODES

Your game is using the new Color Frame Buffer (C.F.B.) Hardware System, one of more advanced systems available in the business today.

The CFB provides three service modes:
(1) Power on self test for each board
(2) Service Index
(3) Switch Test

I. POWER ON SELF TEST:

There are three boards in the C.F.B. System:
1) ZPU-2000
2) CFB-1000
3) VSB-2000

Each board has its own test L.E.D. and each board goes through its own self test on power-up. Each flash checks a particular section of the board. The L.E.D. flashes upon completion of a test.

Listed below, by board, is the sequence of flashes of the L.E.D. and what section of the board is being checked.

ZPU-2000:

9 Flashes:

1st = Z80 microprocessor
2nd = Rom 0 position 1H
3rd = Rom 1 position 2H
4th = Rom 2 position 3H
5th = Rom 3 position 4H
6th = Scratch Ram 6C
7th = Bookkeeping 6F
8th = VSB/ZPU Port Communication
ZPU Board must be able to "talk" and "listen" to the VSB Board to complete this test.
9th = Shared Ram Test
Chip located position 3F on CFB Board. ZPU Board must be able to "talk" to the CFB Board to complete this test.

CFB-1000:
8 Flashes:

1st = Z80 Microprocessor
2nd = Rom 0 Program Prom 7F
3rd = Rom 2 Pattern Prom 8K
4th = Rom 3 Pattern Prom 10K
5th = Rom 4 Pattern Prom 11K
6th = Parameter Ram 13K
7th = Custom Video Controller
8th = Shared Ram Position 3F
CFB Board must be able to "talk" and "listen" to the ZPU Board to complete this test.

VSB-2000:
6 Flashes:

1st = Z80 Microprocessor
2nd = Rom 0 Program Prom (2D)
3rd = Rom 1 Program Prom (4D)
4th = VSB/ZPU Port Communication
VSB Board must be able to "talk" and "listen" to ZPU Board to complete this test.
5th = Scratch Ram L.S.N. (4E)
6th = Scratch Ram M.S.N. (5E)

II. SERVICE INDEX:

Access into the Service Index can be made by turning Switch No. 12 of the ZPU Board on OR by holding the Service Index Interlock Switch closed during power-up. (Service Index Interlock Switch is located in upper right hand corner of the drawer by the power transformer).

SERVICE INDEX	DIP 12
ON	ON
OFF	OFF

The service index displays seven (7) categories on the screen, that provide access to Bookkeeping Information, Game and Coin Adjustment Settings, and Various Diagnostic Tests.

A. The categories in the service index are listed below:

01 Bookkeeping
02 Game Adjustment
03 Credit/Coin Adjustment
04 Monitor Test
05 Sound Test
06 Gun Adjustment Mode
07 Game Play Statistics

B. Selecting a category:
To select a category you:
(1) push the Player One button to move the Red Bar up the index.
(2) push the Player Two button to move the Red Bar down the index.
(3) To select a category push the Fire Button on the gun.
(4) To exit from a category, push the Fire Button on the gun.

C. Description of Categories:

01 Bookkeeping: The Bookkeeping category contains information on:

(1) Total plays
(2) Coins through the left coin chute.
(3) Coins through the right coin chute.
(4) Total seconds played
(5) Longest game in seconds
(6) Shortest game in seconds
(7) Highest game score
(8) Highest rack played

To reset the categories back to zero, push switch number two (2) on the ZPU-2000 Board (See ZPU illustration, Sec. 4). This resets all categories except number 7, highest game score, this is handled separately.

NOTE: Number 6, shortest game in seconds is reset to 99.

HIGHEST GAME SCORE:

The CFB System displays twenty (20) high scores in two different categories; All Time and Today.

Scores in the Today column are reset every time the the machine is turned off.

Scores in the All Time column are retained in memory and are not reset when the machines is turned off.

Scores in the All Time Column, can be cleared One At A Time by pushing Switch Number One on the ZPU-200 Board (See ZPU Illustration Sec. 4). Each push of Switch One clears the highest score of the group and all other scores move up. To clear the entire column push Switch One, ten (10) times.

02 Game Adjustments:

Displays how a particular adjustment has been set, the dip switches controlling that function, and the status of those switches.

03 Credit/Coin Adjustments:

Show what Coin/Credit combination has been set for both the Left and Right Coin Chutes, and which switches control each chute.

04 Monitor Test:

Displays a Red, Blue, Green or Crosshatch pattern on the screen for monitor adjustments.

To change screens, push the Player One button.

05 Sound Test:

Allows you to test each sound of the game individually. To do this use either the Player One or Player Two buttons to call up the number of the sound (See Chart) you want to test. Pushing the Fire Button on the gun creates the sound.

To exit the Sound Test, call up position number 23 (Exit Sound Test) and push the Fire Button on the gun.

LIST OF GAME SOUNDS:

01	N/U
02	Credit
03	Game Start
04	Extra Life
05	Saucer lift-off
06	Bonus score add sound
07	Saucer flying
08	Saucer Zapping life
09	Game over
10	Aliens coming onto screen
11	Aliens entering ship
12	
13	Gun sound
14	Alien hit sound
15	Wall hit sound
16	N/U
17	Saucer exploding
18	Freeze target hit sound
19	Thaw out sound
20	Typing sound
21	Title page, sound of yellow line going through letters.
22	Title page, sound of yellow line when through letters.
23	Exit sound test

06 Gun Adjustment Mode:

This mode allows you to adjust the position of the shot on the screen.

CAUTION: Right, Left, Top, Bottom is the proper adjustment sequence. It must be followed for proper adjustment.

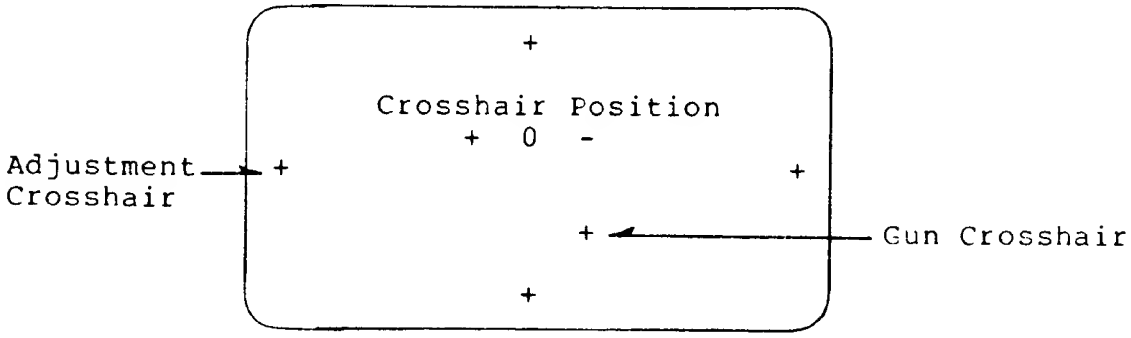

To adjust the gun shot, move the gun crosshair to the right adjustment crosshair first.

Using the adjustment tool, included in the service envelope, adjust Pot R1 on the UIB Board (located behind the gun access panel) (For location and identification of UIB trim pots, see UIB illustration in Sec. IV).

Adjust the pot until the 0 of the crosshair position turns from green to red. For proper final adjustment, the 0 of the crosshair position should be red, and the + and - should be green.

To complete the gun adjustment, adjust;

Left, Pot R2 on UIB Board
Top, Pot R3 on UIB Board
Bottom, Pot R4 on UIB Board

in that order.

NOTE: Only one of the adjustment crosshairs is on the screen at a time. To move the crosshair to the next position push the Player One button.

To exit test, push the Fire Button on the gun.

07 Game Play Statistics:

This category contains information on:

(1) Range of scores:
This page shows the range of scores achieved in 10K points increments. It displays values from 0 to 140K points. It also shows how many times each level was reached.

(2) Range of times:
This page shows the range of time played, in minutes. Times shown are from 0 to 14 minutes and increase at one minute intervals.

(3) Range of racks:
This page shows the number of times the highest rack per game was reached.

Pushing the Player One Button changes the display to the next page.

Pushing the Player Two Button clears the page being displayed back to zero.

SECTION III SWITCH TEST

The switch test can be turned on two different ways:
(1) By turning switch number 13 of the ZPU Board on and pushing the Reset Button (SW3).
(2) Holding the Player One start button closed during power-up.

0 = Switch open 1 = Switch closed

SWITCH	STROBE	BIT
Player One	5	2
Player Two	5	3
Fire Button	5	4
Right Coin Switch	5	0
Left Coin Switch	5	1
ZPU Switch 1	0	6
ZPU Switch 2	0	7
Dip Switch 4	4	0
Dip Switch 5	4	1
Dip Switch 6	4	2
Dip Switch 7	4	3
Dip Switch 8	4	4
Dip Switch 9	4	5
Dip Switch 10	4	6
Dip Switch 11	4	7
Dip Switch 12	3	0
Dip Switch 13	3	1
Dip Switch 14	3	2
Dip Switch 15	3	3
Dip Switch 16	3	4
Dip Switch 17	3	5
Dip Switch 18	3	6
Dip Switch 19	3	7
Dip Switch 20	2	0
Dip Switch 21	2	1
Dip Switch 22	2	2
Dip Switch 23	2	3
Dip Switch 24	2	4
Dip Switch 25	2	5
Dip Switch 26	2	6
Dip Switch 27	2	7
Dip Switch 28	1	0
Dip Switch 29	1	1
Dip Switch 30	1	2
Dip Switch 31	1	3
Dip Switch 32	1	4
Dip Switch 33	1	5
Dip Switch 34	1	6
Dip Switch 35	1	7

Horizontal movement of gun is Strobe 6, Bits 0 - 7.
Movement is from 0000 0000 to 1111 1111

Vertical movement of gun is Strobe 7, Bits 0 - 7
Movement is from 0000 0000 to 1111 1111.

MA-ZER BLA-ZER

NOTE
This staple temporarily holds the schematic package together. Remove the staple before using these schematics.

Schematic Package Supplement

ATARI INC., 1983

MB. SP.—001
1st Printing

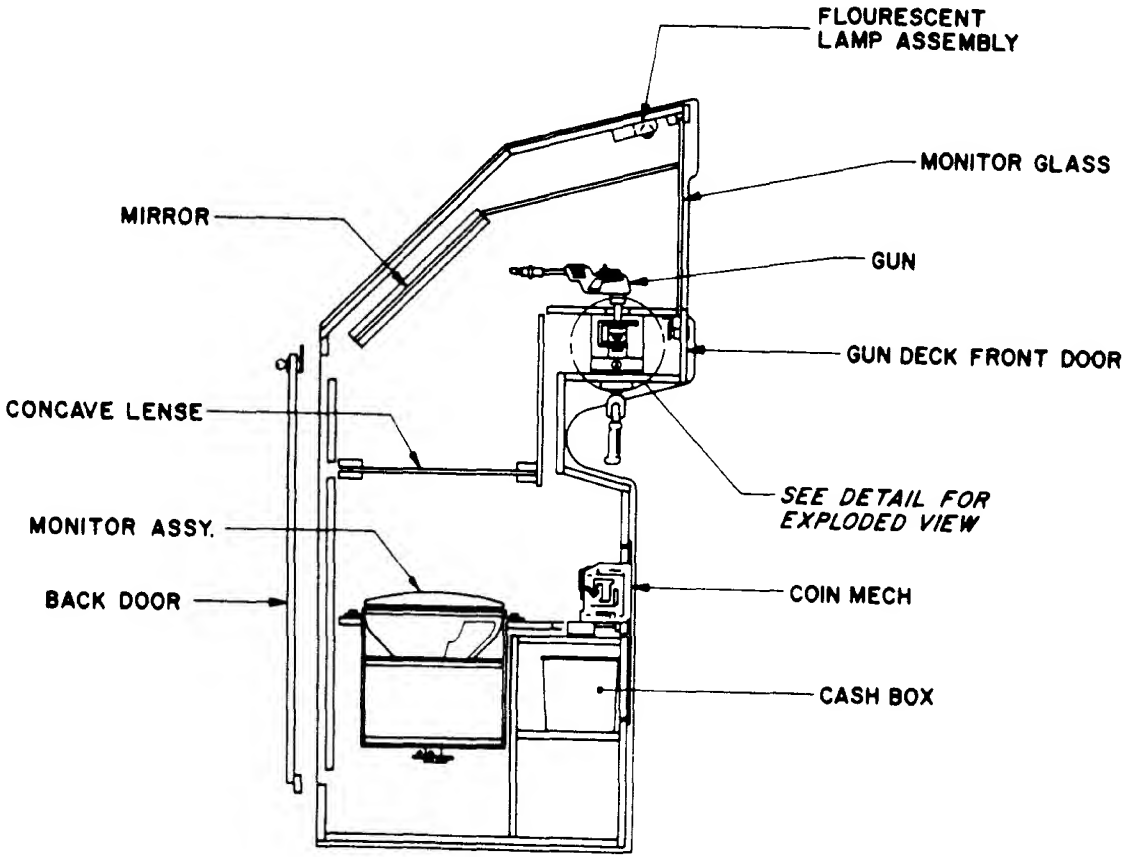
FLOURESCENT
LAMP ASSEMBLY
MONITOR GLASS
MIRROR
GUN
GUN DECK FRONT DOOR
CONCAVE LENSE
SEE DETAIL FOR
EXPLODED VIEW
MONITOR ASSY.
BACK DOOR
COIN MECH
CASH BOX

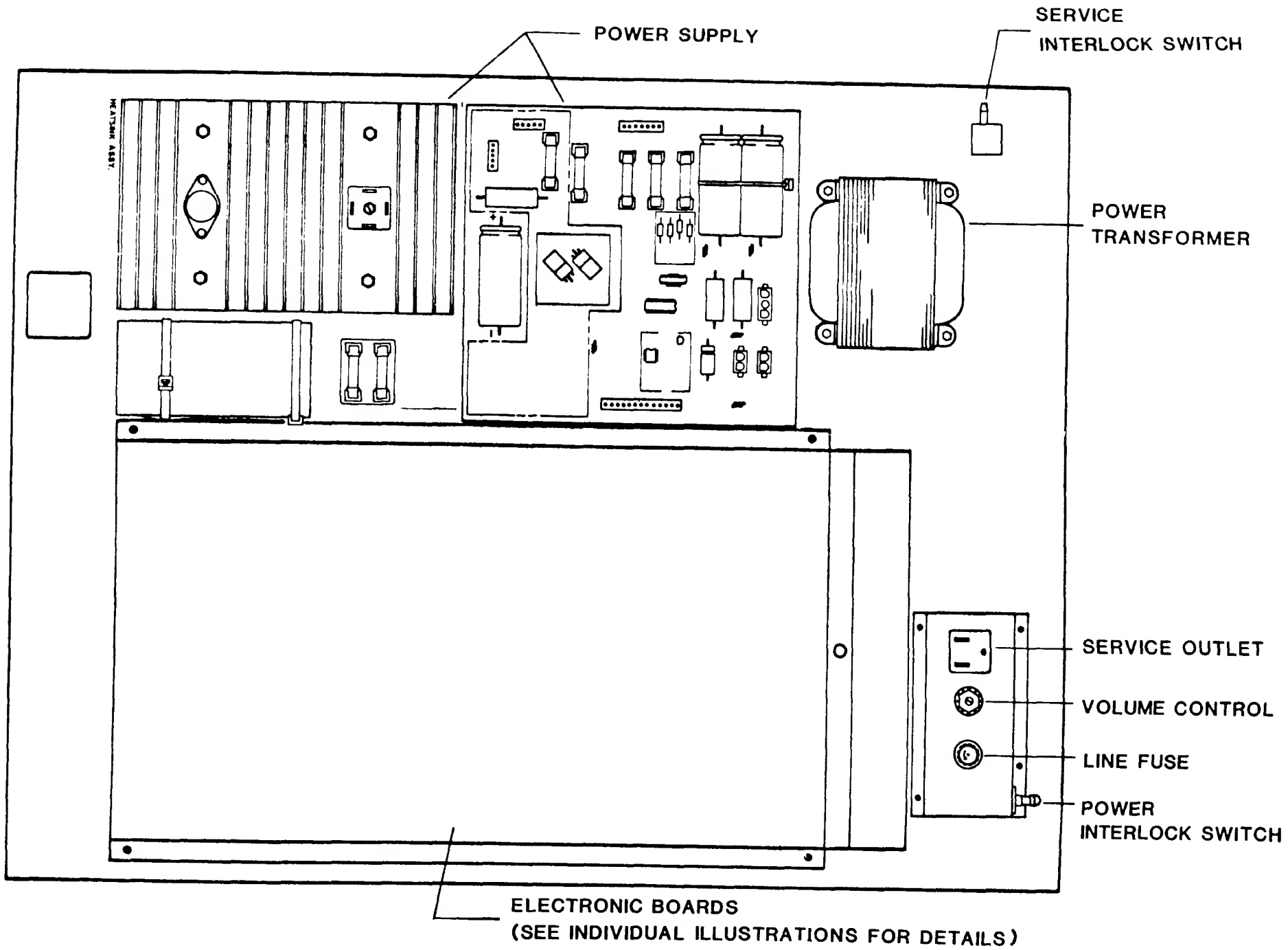
POWER SUPPLY
SERVICE
INTERLOCK SWITCH
POWER
TRANSFORMER
SERVICE OUTLET
VOLUME CONTROL
LINE FUSE
POWER
INTERLOCK SWITCH
ELECTRONIC BOARDS
(SEE INDIVIDUAL ILLUSTRATIONS FOR DETAILS)

ZPU P.C.BOARD

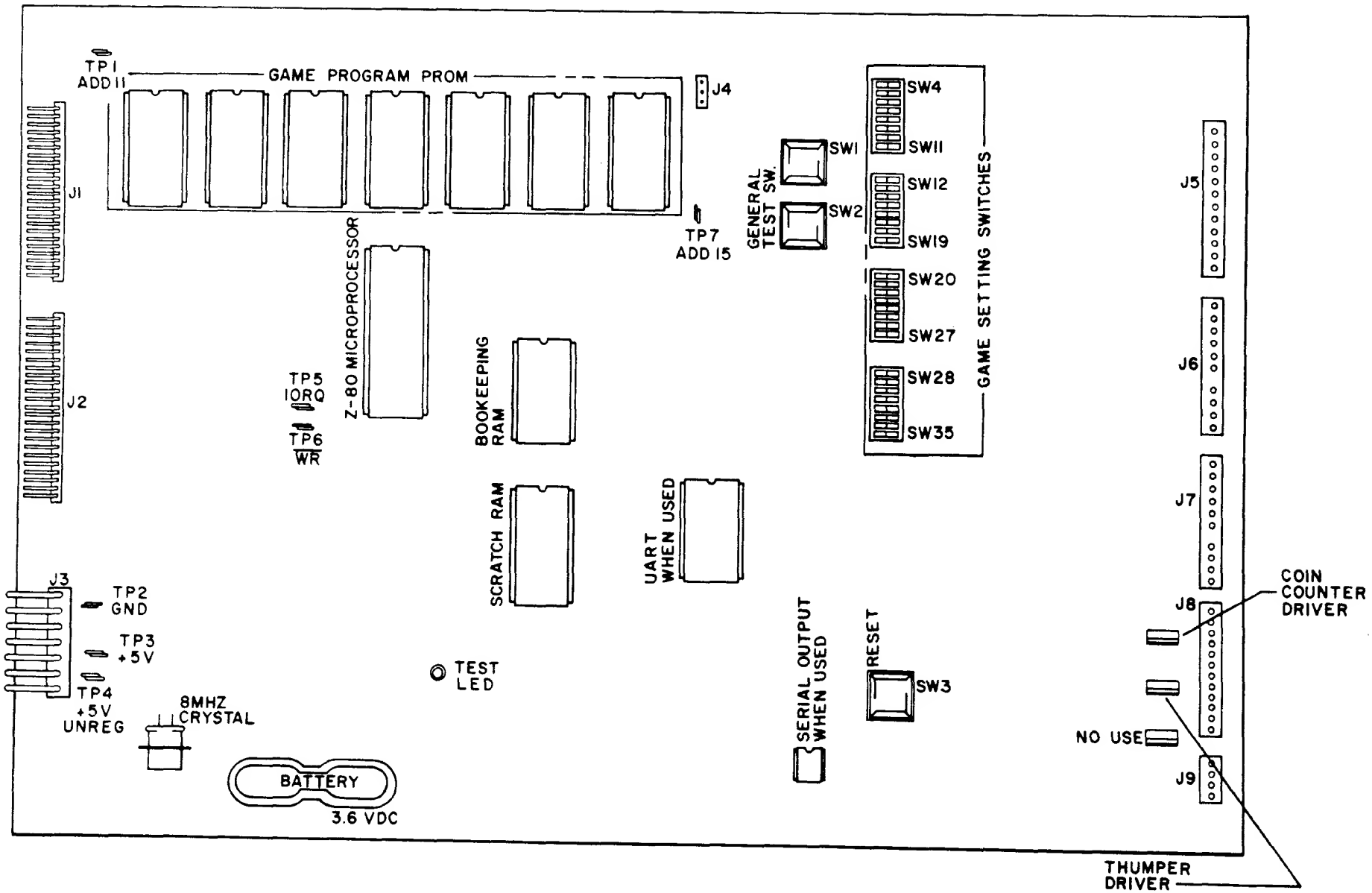
TP1
ADD11
GAME PROGRAM PROM
J4
J1
J2
TP7
ADD 15
GENERAL TEST SW.
SW1
SW2
SW4
SW11
SW12
SW19
SW20
SW27
SW28
SW35
GAME SETTING SWITCHES
J5
J6
J7
J8
J9
TP5
IORQ
TP6
WR
Z-80 MICROPROCESSOR
BOOKEEPING RAM
SCRATCH RAM
UART WHEN USED
J3
TP2
GND
TP3
+5V
TP4
+5V
UNREG
8MHZ
CRYSTAL
TEST
LED
SERIAL OUTPUT WHEN USED
RESET
SW3
BATTERY
3.6 VDC
COIN
COUNTER
DRIVER
NO USE
THUMPER
DRIVER

CFB-1000 P.C. BOARD

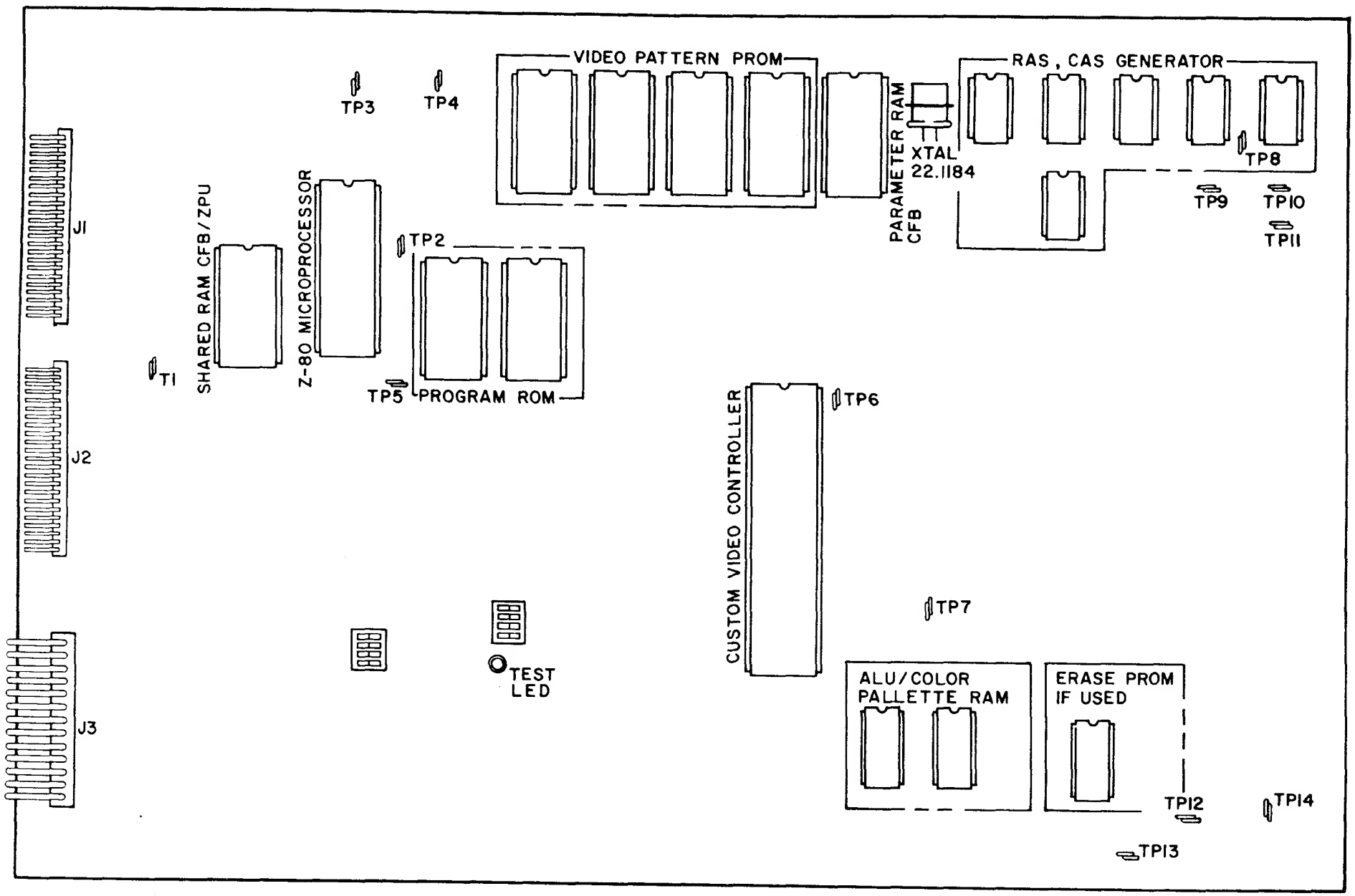

VSB-2000 P.C.B.

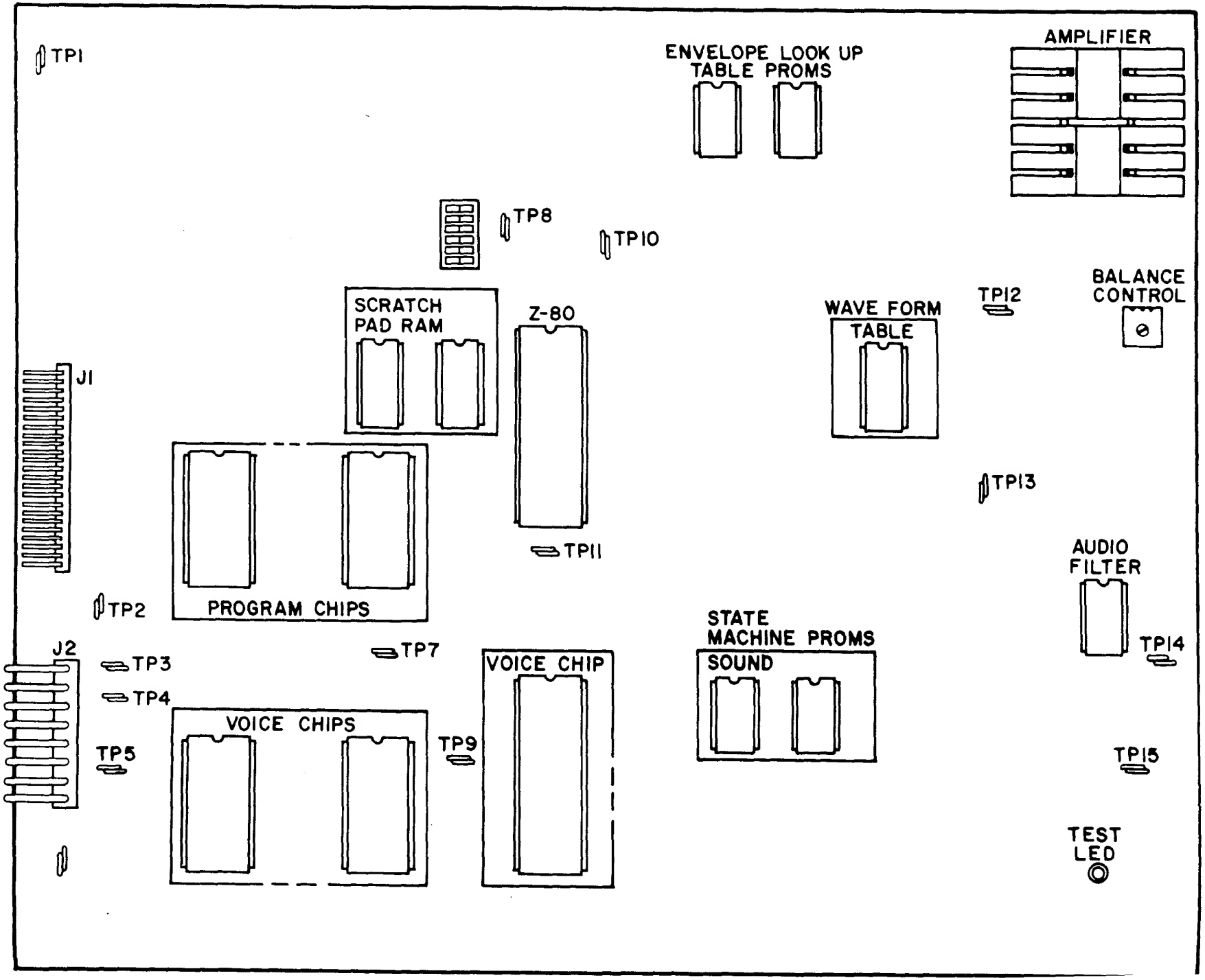
TP1
ENVELOPE LOOK UP TABLE PROMS
AMPLIFIER
TP8
TP10
SCRATCH PAD RAM
Z-80
WAVE FORM TABLE
TP12
BALANCE CONTROL
J1
TP13
TP11
AUDIO FILTER
TP2
PROGRAM CHIPS
STATE MACHINE PROMS
SOUND
TP14
J2
TP3
TP7
VOICE CHIP
TP4
VOICE CHIPS
TP9
TP5
TP15
TEST LED

PS-1400 P.C.BOARD

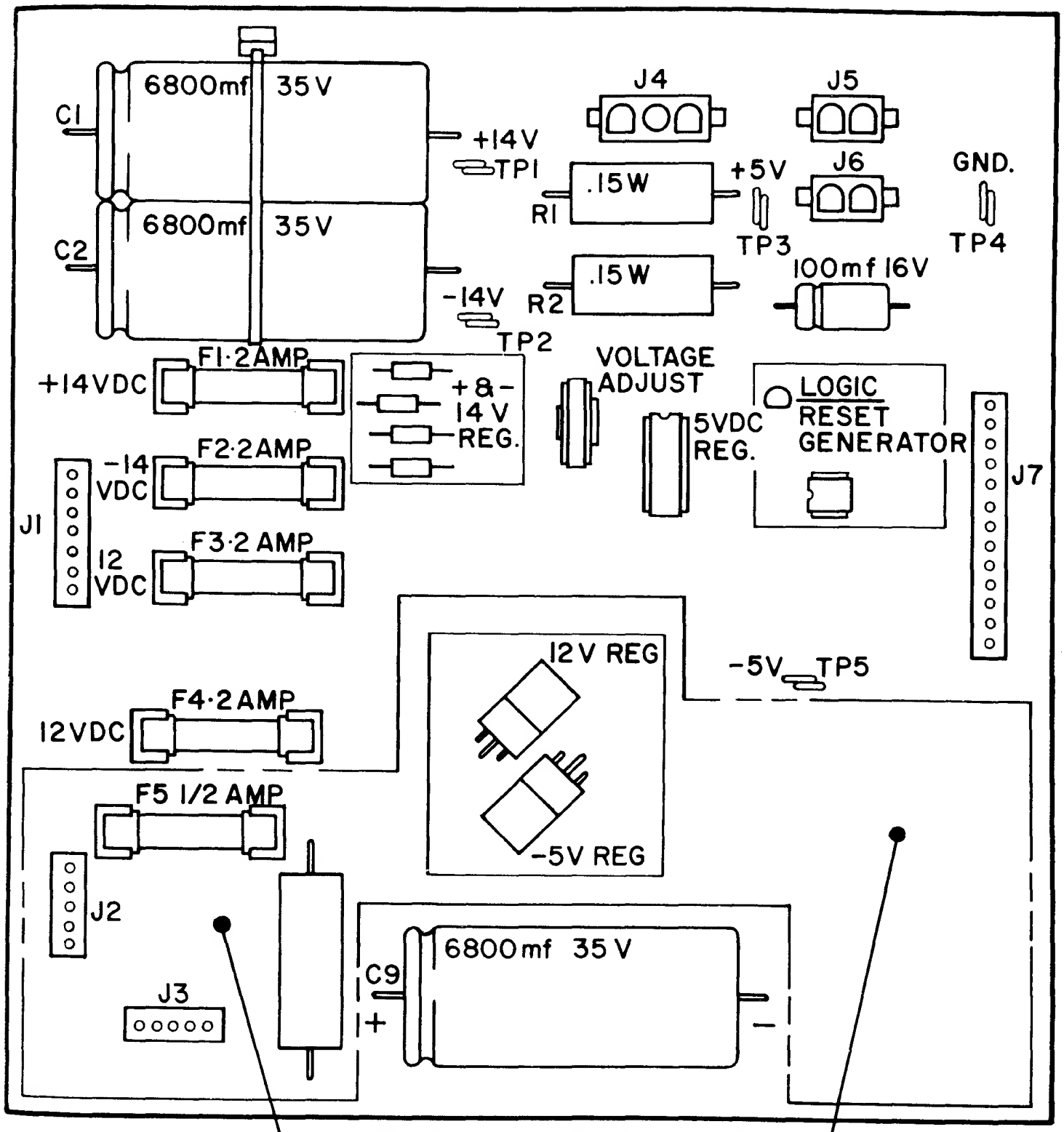

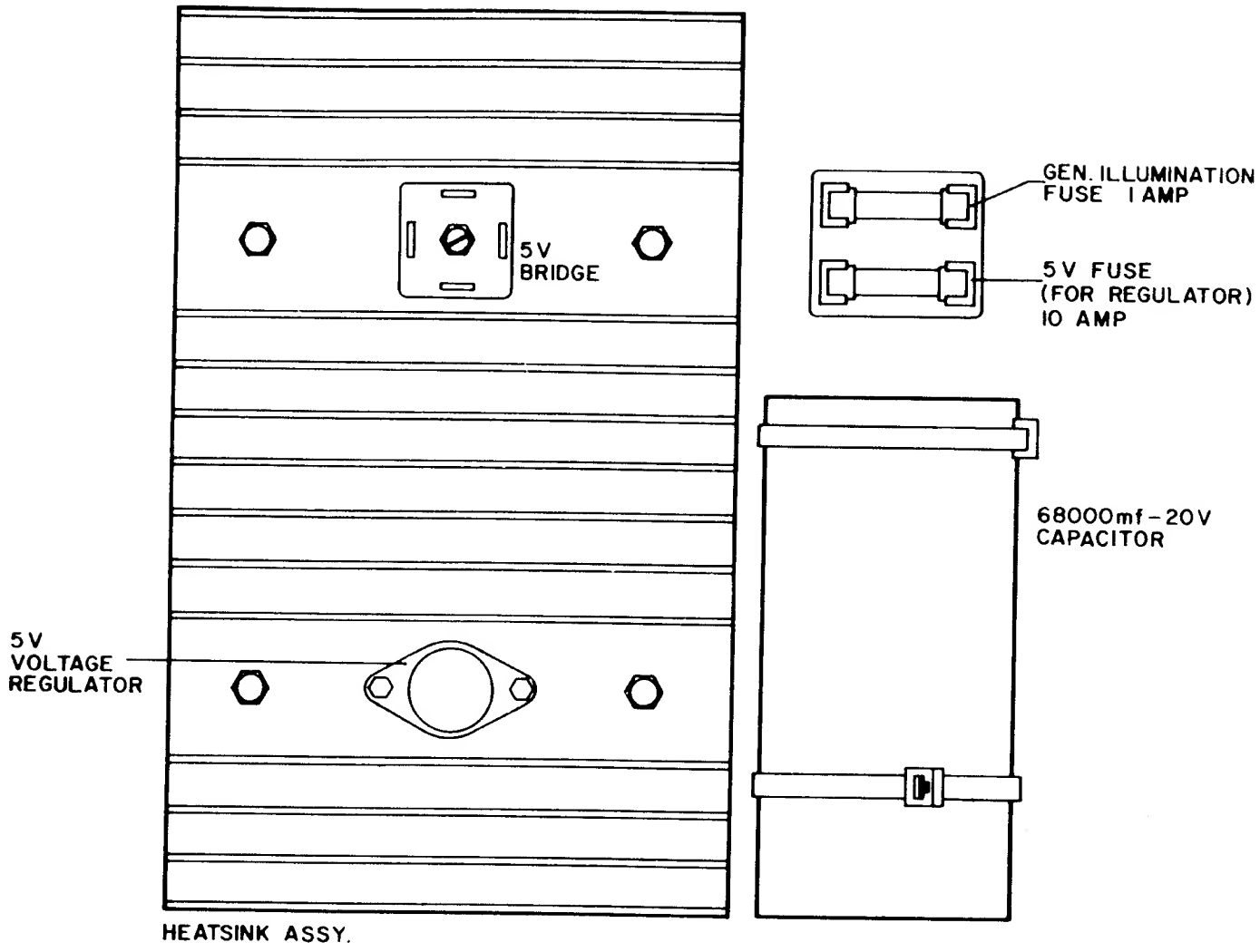
5V
BRIDGE
GEN. ILLUMINATION
FUSE 1 AMP
5 V FUSE
(FOR REGULATOR)
10 AMP
68000mf - 20V
CAPACITOR
5V
VOLTAGE
REGULATOR
HEATSINK ASSY.

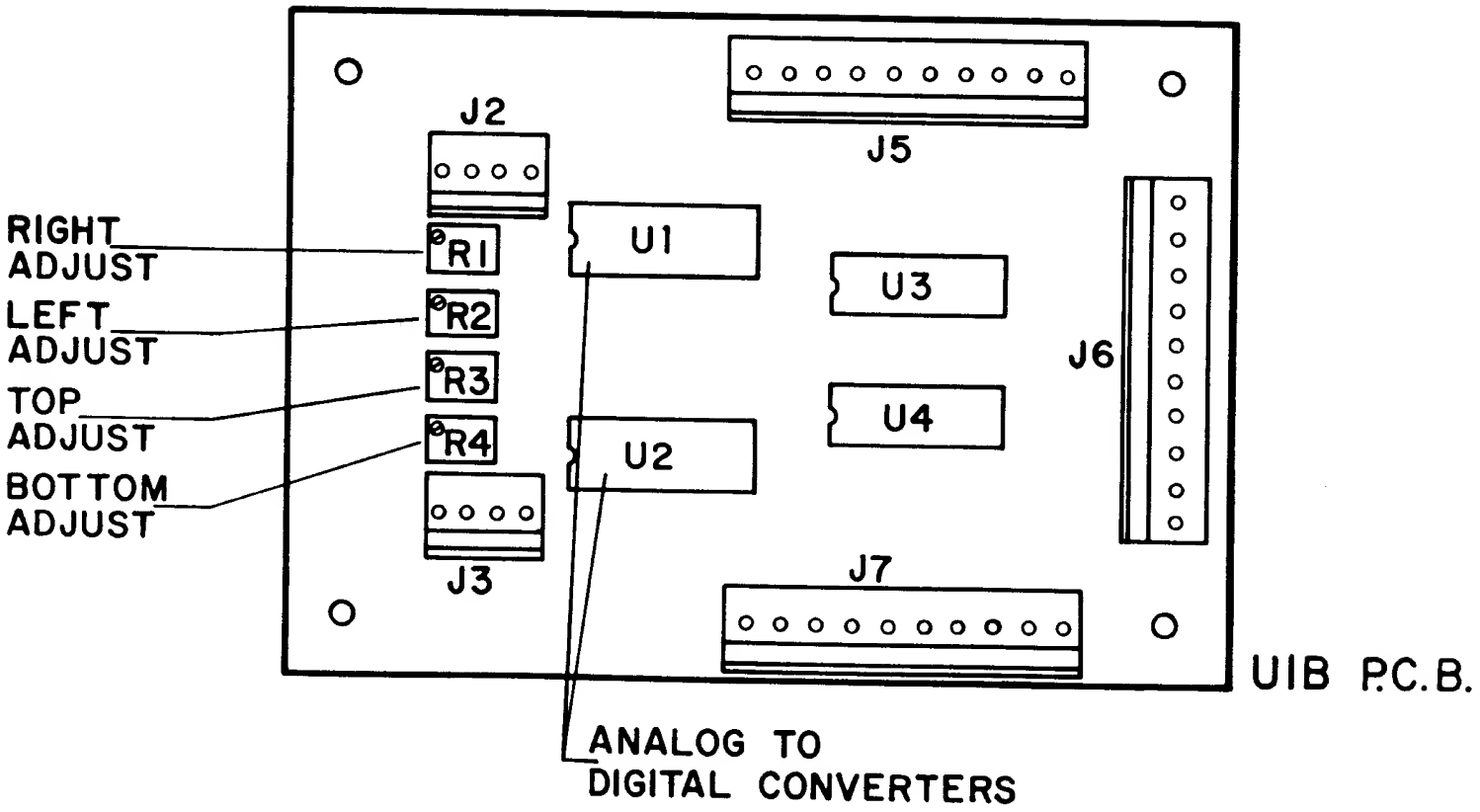
J2
J5
RIGHT ADJUST
R1
U1
LEFT ADJUST
R2
U3
J6
TOP ADJUST
R3
U4
BOTTOM ADJUST
R4
U2
J3
J7
UIB P.C.B.
ANALOG TO DIGITAL CONVERTERS

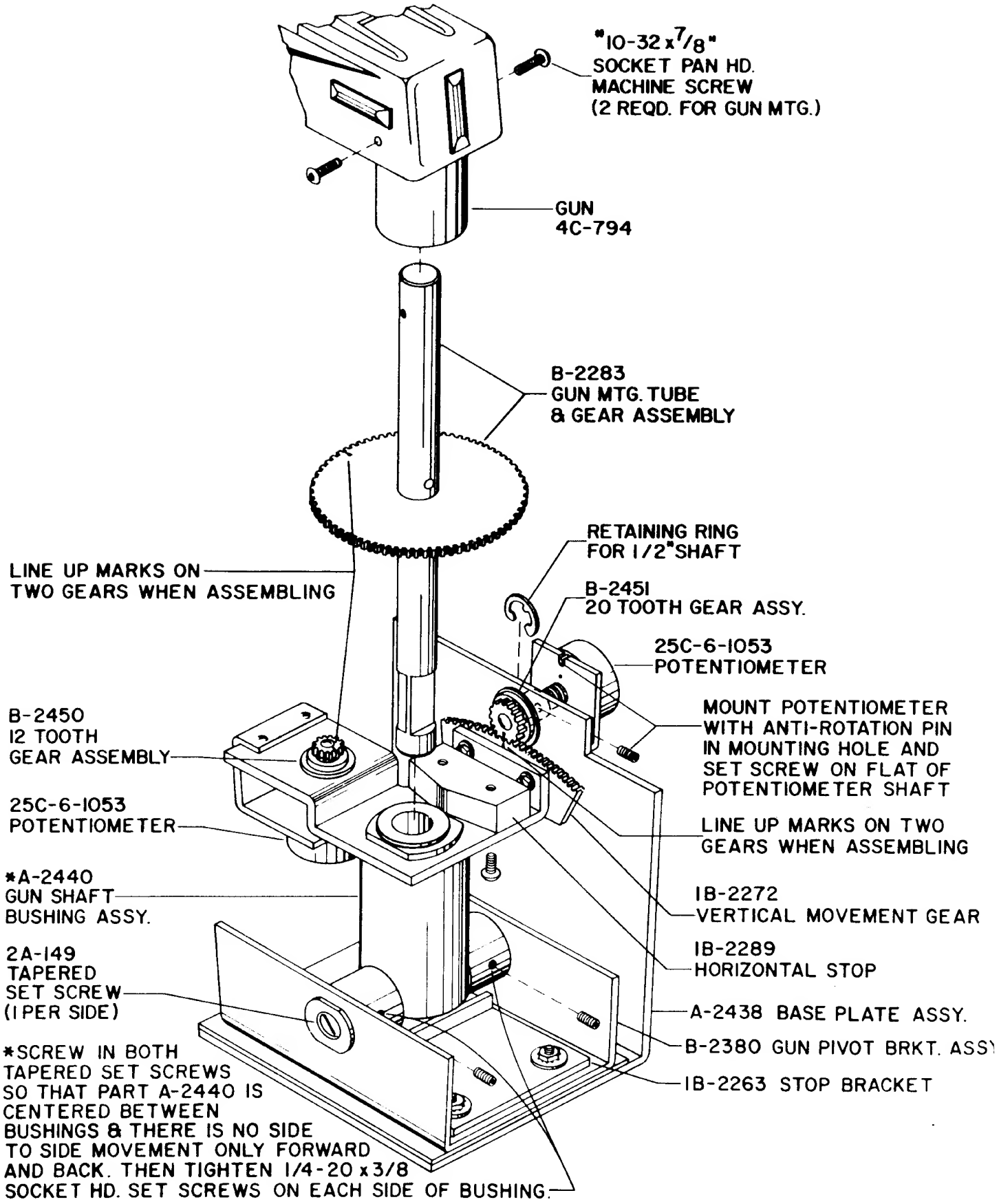
"10-32 x 7/8"
SOCKET PAN HD.
MACHINE SCREW
(2 REQD. FOR GUN MTG.)
GUN
4C-794
B-2283
GUN MTG. TUBE
& GEAR ASSEMBLY
RETAINING RING
FOR 1/2" SHAFT
LINE UP MARKS ON
TWO GEARS WHEN ASSEMBLING
B-2451
20 TOOTH GEAR ASSY.
25C-6-1053
POTENTIOMETER
B-2450
12 TOOTH
GEAR ASSEMBLY
MOUNT POTENTIOMETER
WITH ANTI-ROTATION PIN
IN MOUNTING HOLE AND
SET SCREW ON FLAT OF
POTENTIOMETER SHAFT
25C-6-1053
POTENTIOMETER
LINE UP MARKS ON TWO
GEARS WHEN ASSEMBLING
*A-2440
GUN SHAFT
BUSHING ASSY.
1B-2272
VERTICAL MOVEMENT GEAR
2A-149
TAPERED
SET SCREW
(1 PER SIDE)
1B-2289
HORIZONTAL STOP
A-2438 BASE PLATE ASSY.
B-2380 GUN PIVOT BRKT. ASSY
1B-2263 STOP BRACKET
*SCREW IN BOTH
TAPERED SET SCREWS
SO THAT PART A-2440 IS
CENTERED BETWEEN
BUSHINGS & THERE IS NO SIDE
TO SIDE MOVEMENT ONLY FORWARD
AND BACK. THEN TIGHTEN 1/4-20 x 3/8
SOCKET HD. SET SCREWS ON EACH SIDE OF BUSHING.

A	ISSUED E.I 92439

FROM SHEET 2 OF 3

Z80A	11	29
374	14	7
368	16	8
382	14	7
LS399	16	8
LS373	20	10
LS273	20	10
LS257	16	8
LS245	20	10
LS244	20	10
LS174	16	8
LS169	16	8
LS161	16	8
LS139	16	8
LS138	16	8
LS123	16	8
LS109	14	7
LS86	14	7
LS74	14	7
LS27	14	7
LS10	14	7
LS08	14	7
LS04	14	7
LS02	14	7
LS00	14	7
7451	14	7
6353-1	18	9
4132	8	16
2764	1,26,28	14
2148	18	9
2128	1,26,28	14
I.C. TYPE	+5V	GND
	PIN NO.	

NOTICE TO ALL PERSONS RECEIVING THIS DRAWING.

ATARI®

MazerBlazer

SCHEMATIC, COLOR FRAME BUFFER P.C. BOARD

34D-2118-S

D | A

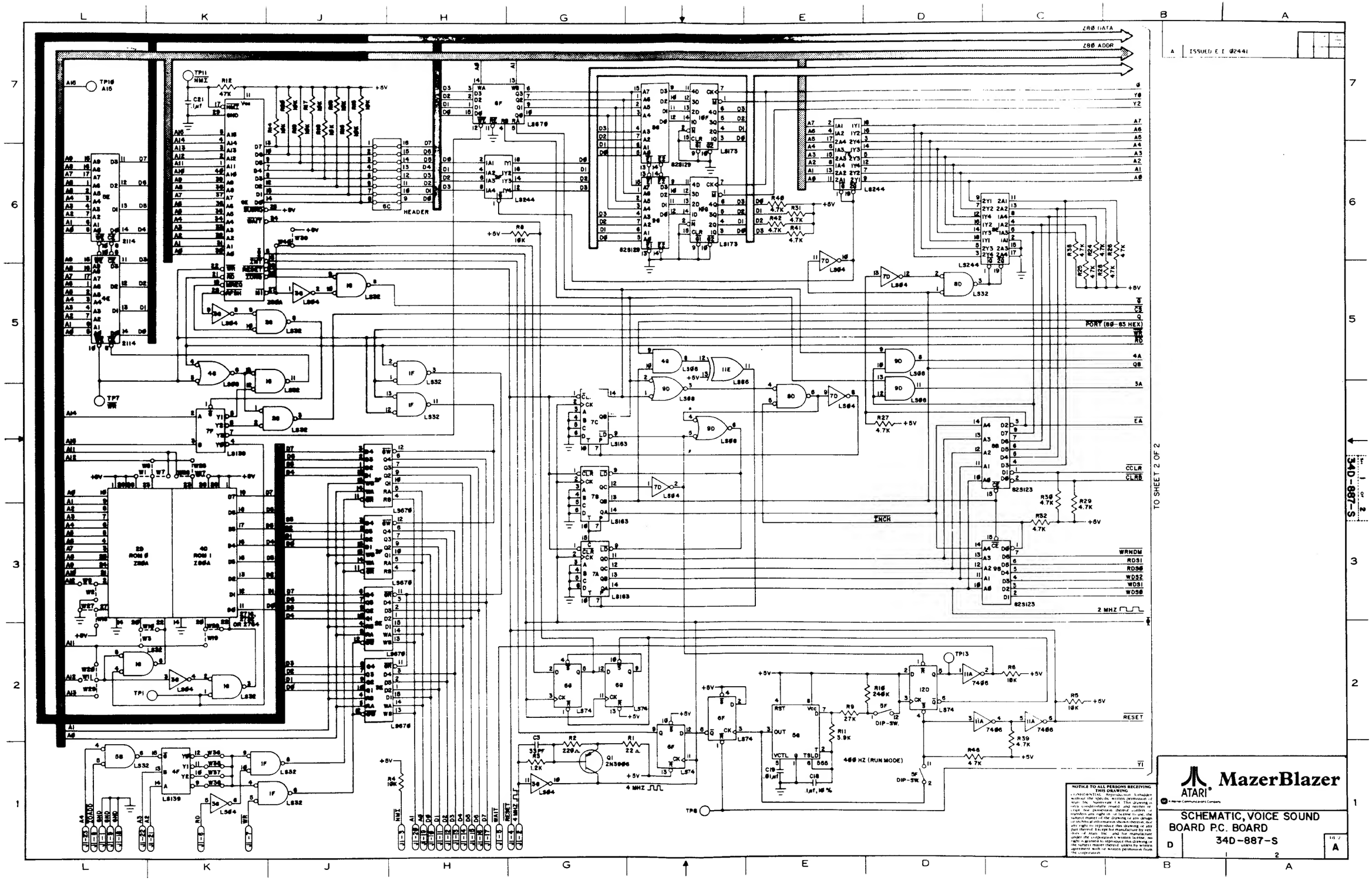

Z80 DATA
Z80 ADDR
HEADER
PORT (80-83 HEX)
TO SHEET 2 OF 2
400 HZ (RUN MODE)
4 MHZ
2 MHZ
ISSUED E I 02441
ATARI
MazerBlazer
SCHEMATIC, VOICE SOUND
BOARD P.C. BOARD
34D-887-S
D
A
34D-887-S

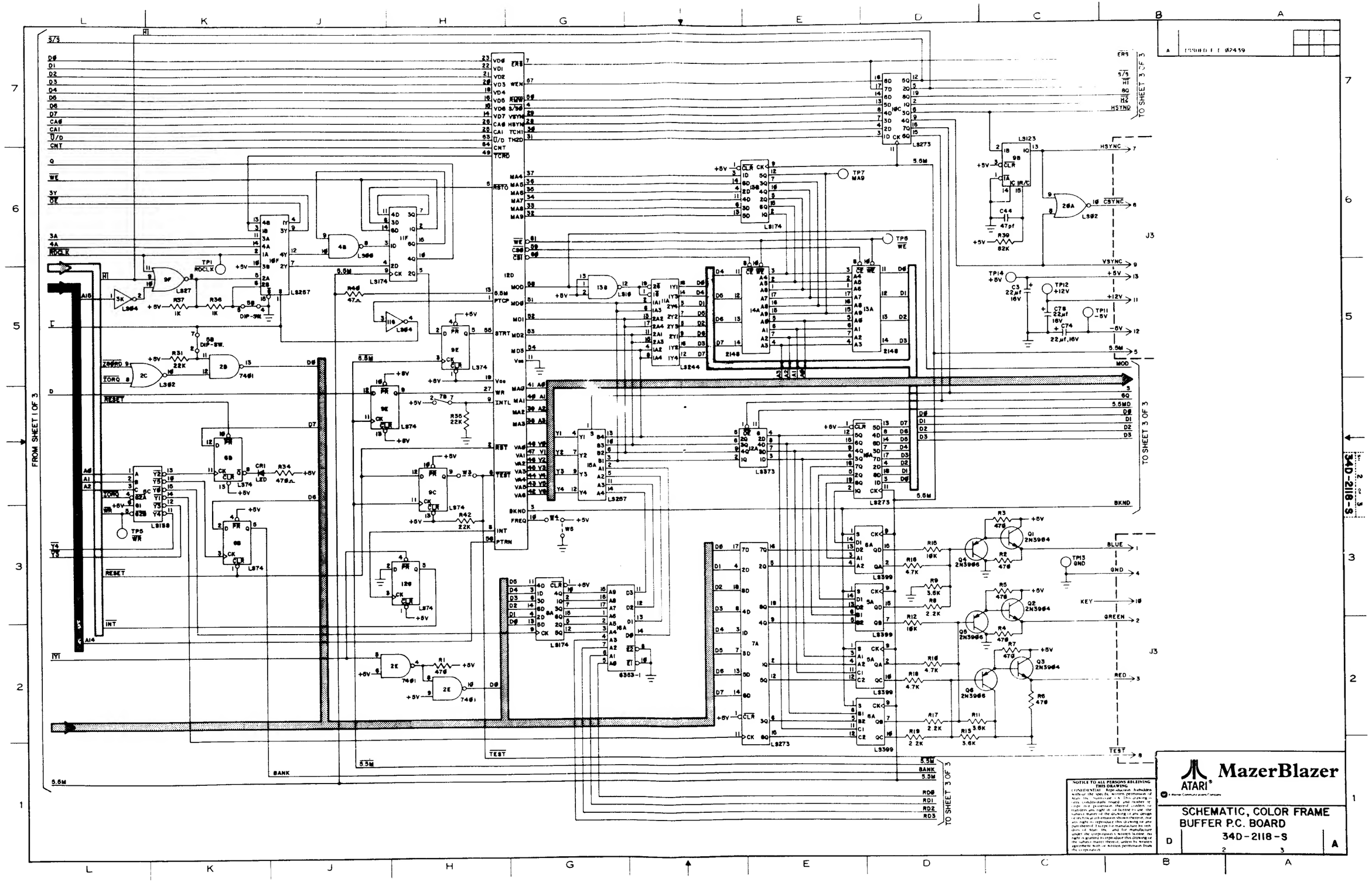
FROM SHEET 1 OF 3
TO SHEET 3 OF 3
TO SHEET 3 OF 3
TO SHEET 3 OF 3
ISSUED 12 02439
MazerBlazer
ATARI
SCHEMATIC, COLOR FRAME
BUFFER P.C. BOARD
34D-2118-S
NOTICE TO ALL PERSONS RECEIVING THIS DRAWING
CONFIDENTIAL! Reproduction forbidden without the specific written permission of Atari, Inc., Sunnyvale, CA. This drawing is considered trade secret and neither it nor the information it discloses will be disclosed to others without the written permission of Atari, Inc. All rights reserved under the copyright laws of the United States. Reproduction of this drawing in any manner whatsoever without the written permission of Atari, Inc. is strictly forbidden. For permission contact the Atari, Inc. Customer Relations Department.
TP1 ROCLK
TP5 WR
TP6 WE
TP7 MA9
TP11 -5V
TP12 +12V
TP13 GND
TP14 +5V
DIP-SW.
LED
BLUE
GND
KEY
GREEN
RED
TEST
HSYNC
VSYNC
CSYNC
BKND
MOD
BANK
RESET
INT
PTRN
PTCP
STRT
WR
RST
TEST
FREQ
ROCLK
XORO
XORG
RCLK
WE
OE
CAS
CAI
U/D
CNT
TCRD
HSYN
VSYN
ERS
WEN
RSTO
MOD
MD0
MD1
MD2
MD3
Vss
Vcc
INTL
RST
TEST
BKND
FREQ
INT
PTRN
PTCP
STRT
WR
TCM1
TCH2D
12D
MA4
MA5
MA6
MA7
MA8
MA9
VA6
VA7
VA8
VA9
VA10
VA11
VA12
VA13
VA14
VA15
VA16
VA17
VA18
VA19
VA20
VA21
VA22
VA23
VA24
VA25
VA26
VA27
VA28
VA29
VA30
VA31
D0
D1
D2
D3
D4
D5
D6
D7
A0
A1
A2
A3
A4
A5
A6
A7
A8
A9
A10
A11
A12
A13
A14
A15
A16
5.5M
6.5M
74S00
74S02
74S04
74S08
74S10
74S32
74S74
74S86
74S138
74S139
74S157
74S174
74S244
74S273
74S283
74S373
74S374
74S399
2148
6363-1
2N3906
J3

A	ISSUED E.I. 02439			

TO SHEET 2 OF 3

NOTICE TO ALL PERSONS RECEIVING THIS DRAWING.
This drawing is the property of Atari, Inc. All rights reserved. Unpublished rights reserved under the copyright laws of the United States. This drawing is confidential and proprietary to Atari, Inc. and may not be reproduced, published or used in any way without the prior written consent of Atari, Inc. and the manufacturer under the corporation's seal, written below, no right is granted to reproduce this drawing or any part thereof. Except for manufacture by vendors of Atari, Inc. and for manufacture

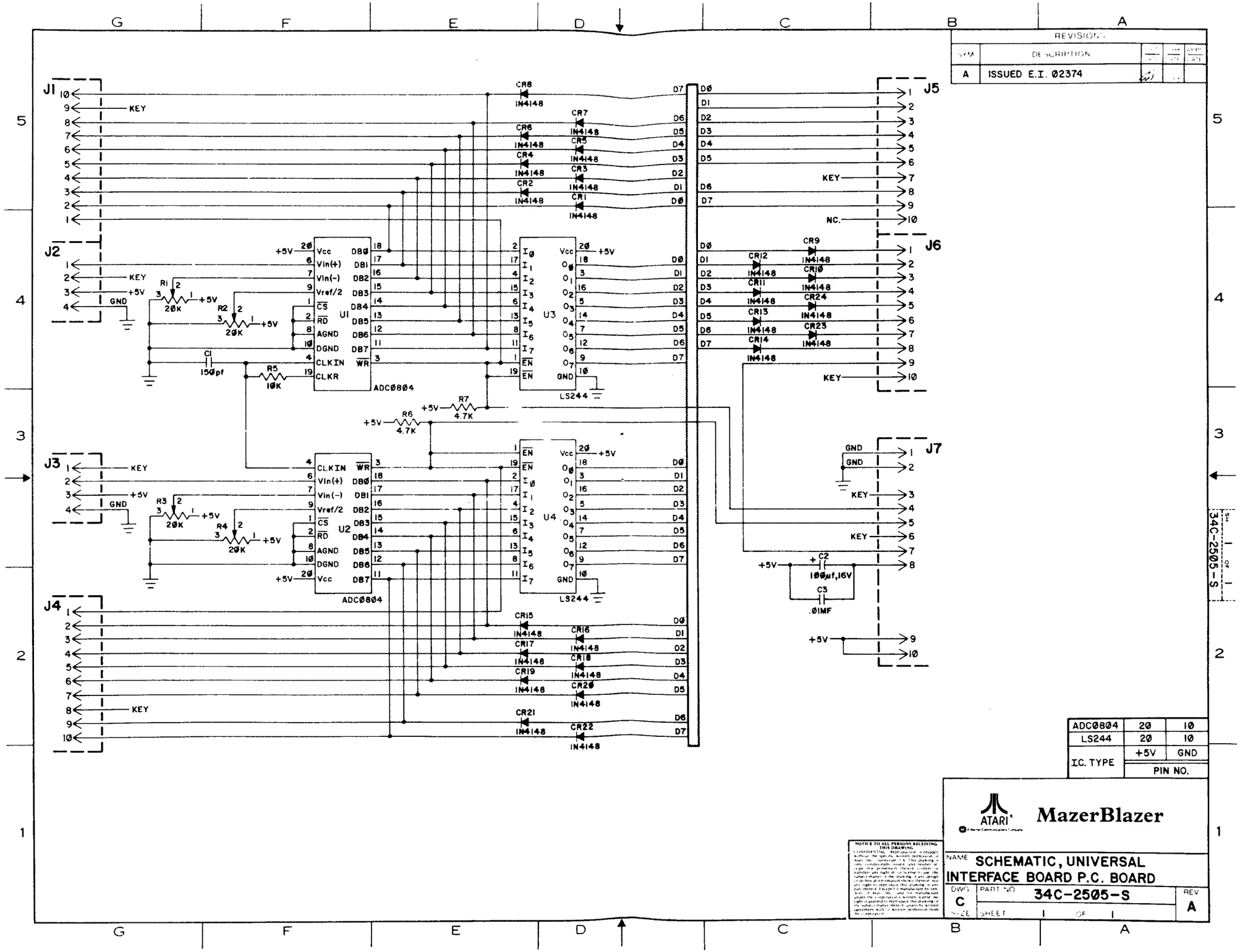

REVISIONS				
SYM	DESCRIPTION			
A	ISSUED E.I. 02374			

IC. TYPE	PIN NO. +5V	PIN NO. GND
ADC0804	20	10
LS244	20	10

ATARI

MazerBlazer

NAME SCHEMATIC, UNIVERSAL INTERFACE BOARD P.C. BOARD

DWG C | PART NO 34C-2505-S | REV A

SIZE | SHEET 1 OF 1

34C-2505-S

REVISIONS				
SYM	DESCRIPTION	DFT DATE	CHK STATE	APPD DATE
A	ISSUED E.I. 02058			

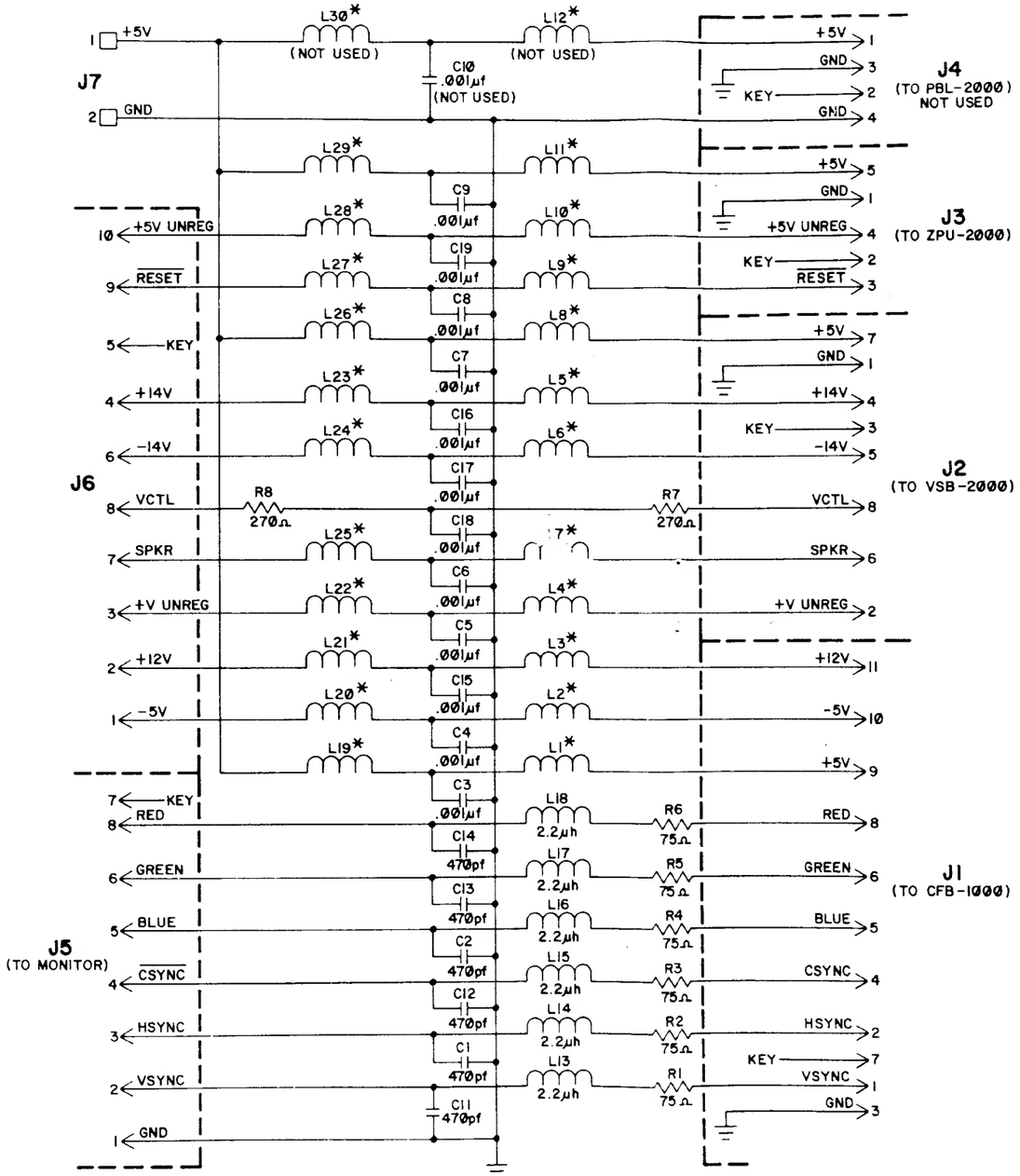

NOTES:

1. * = INDUCTORS ARE FERRITE BEADS.
2. J5, J6 AND J7 MOUNT ON SOLDER SIDE.

NOTICE TO ALL PERSONS RECEIVING THIS DRAWING
CONFIDENTIAL. Reproduction forbidden without the specific written permission of Atari Inc., Sunnyvale, CA. This drawing is submitted to recipient in confidence and with the understanding that neither it nor any part thereof or knowledge or information pertaining thereto will be disclosed to anyone except to those persons in the employ of recipient who have a need to know the contents hereof in connection with the use for which it was loaned, and then only after such persons have been informed that this drawing is confidential and have been directed to treat it as such. Use of this drawing by anyone, including the recipient, for any purpose other than that for which it is loaned, or for the benefit of any other party, or the taking of any action with respect to any matter disclosed in this drawing which might be detrimental to the interests of Atari, Inc. may be enjoined, and damages may be recovered for any such unauthorized use. Recipient by receiving this drawing agrees to return it to Atari, Inc. upon request and not to make or have made any reproductions of the drawing or of the subject matter thereof, unless such reproductions are made with the written permission of Atari, Inc.

ATARI® MazerBlazer

SIZE	PART NO.	REV
C	34C-2283-S	A

SCHEMATIC, CARD RACK FILTER P.C. BOARD

SHT 1 OF 1

34C-2283-S

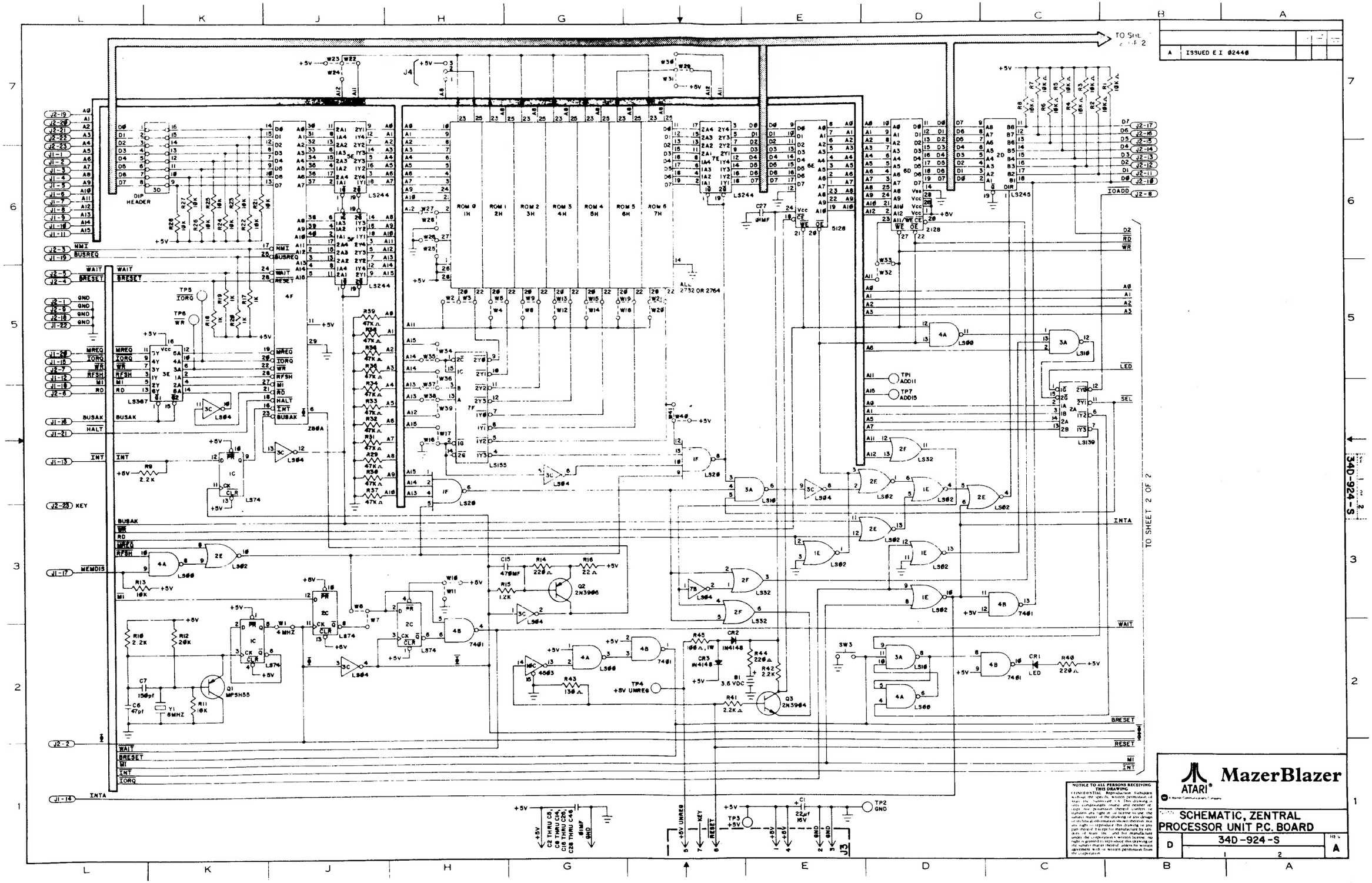

NOTICE TO ALL PERSONS RECEIVING THIS DRAWING

CONFIDENTIAL. Reproduction forbidden without the specific written permission of Atari Inc., Sunnyvale, CA. This drawing is unity confidentially issued and neither receipt nor possession thereof confers or transfers any right in or license to use the subject matter of the drawing or any design or technical information shown thereon nor any right to reproduce this drawing or any part thereof. Except for manufacture by vendors of Atari Inc. and for manufacture under the corporation's written license, no right is granted to reproduce this drawing or the subject matter thereof, unless by written agreement with or written permission from the corporation.

ATARI® MazerBlazer

A Warner Communications Company

SCHEMATIC, ZENTRAL PROCESSOR UNIT P.C. BOARD

D 34D-924-S REV A

34D-924-S

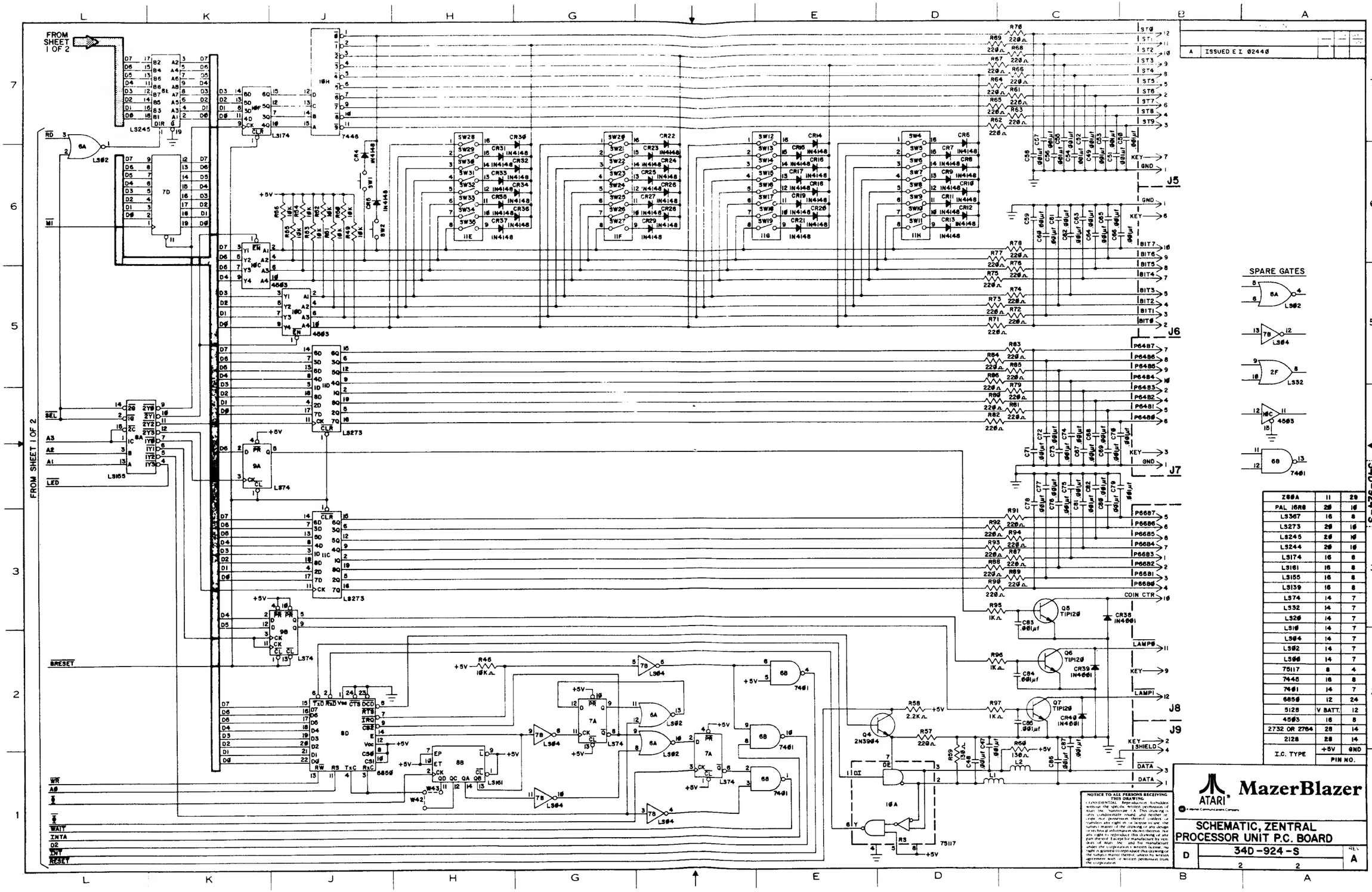

Z80A	11	29
PAL 16R8	29	16
LS367	16	8
LS273	20	10
LS245	20	10
LS244	20	10
LS174	16	8
LS161	16	8
LS155	16	8
LS139	16	8
LS74	14	7
LS32	14	7
LS20	14	7
LS10	14	7
LS04	14	7
LS02	14	7
LS00	14	7
75117	8	4
7446	16	8
7401	14	7
6850	12	24
5128	V BATT.	12
4503	16	8
2732 OR 2764	28	14
2128	28	14
I.C. TYPE	+5V	GND
	PIN NO.	

REV	DESCRIPTION
A	ISSUED E I Ø244Ø

NOTICE TO ALL PERSONS RECEIVING THIS DRAWING.
CONFIDENTIAL. Reproduction forbidden without the specific written permission of Atari Inc., Sunnyvale CA. This drawing is only considerable inward and neither of copy nor possession thereof confers or transfers any right in or to same to use the subject matter of the drawing or any design or feature of information shown thereon nor any right to reproduce this drawing or any part thereof. Neither the drawing nor any part of Atari Inc. shall be used for any purpose under the circumstances unless access has been granted to reproduce this drawing or the subject matter thereof, unless by written agreement with or written permission from the corporation.

ATARI® MazerBlazer

SCHEMATIC, ZENTRAL PROCESSOR UNIT P.C. BOARD

SIZE	DRAWING NO.	REV
D	34D-924-S	A
	2 OF 2	

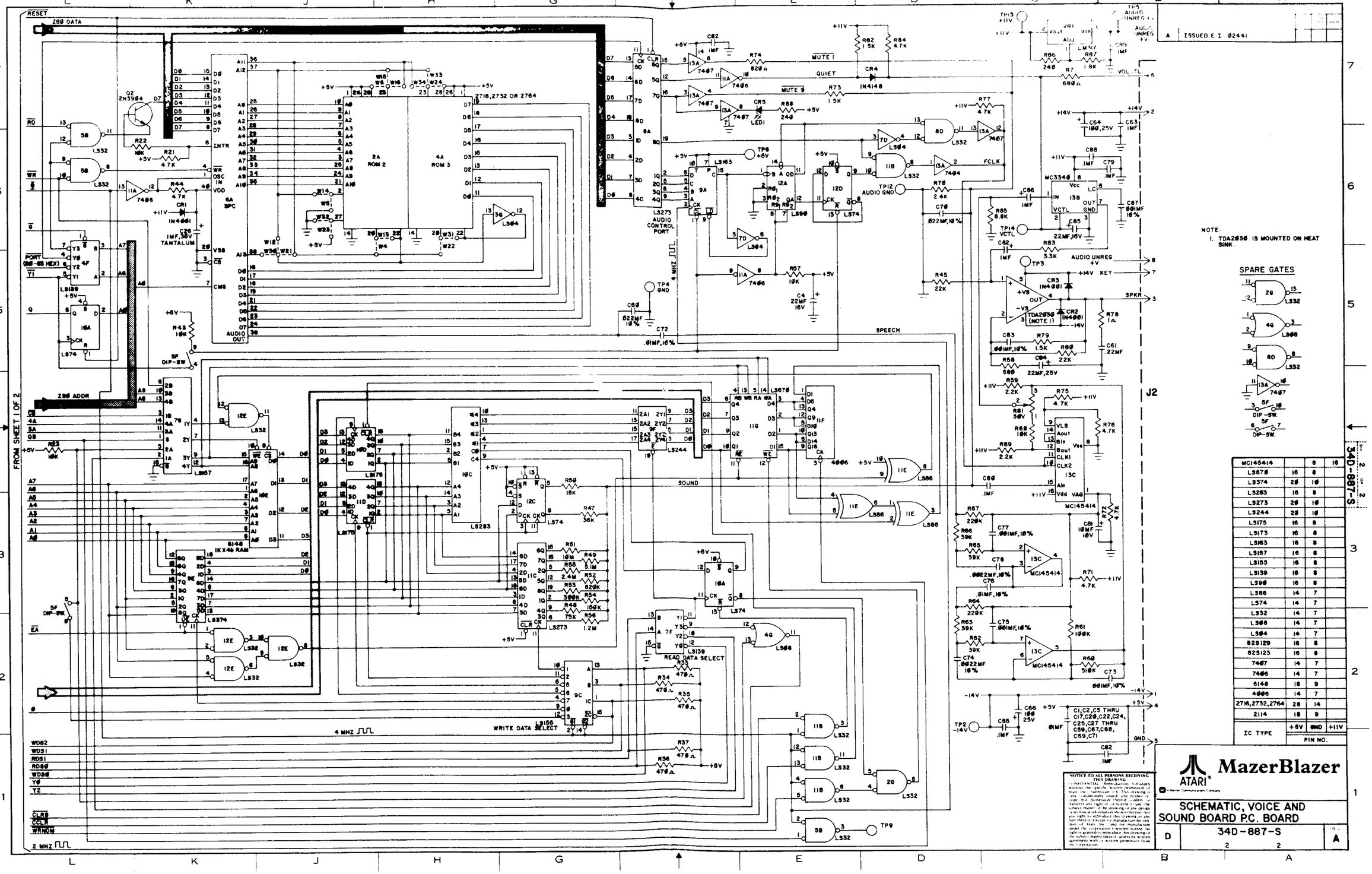

MC1454I4		8	16
LS367	16	8	
LS374	20	10	
LS283	16	8	
LS273	20	10	
LS244	20	10	
LS175	16	8	
LS173	16	8	
LS163	16	8	
LS157	16	8	
LS155	16	8	
LS139	16	8	
LS96	16	8	
LS86	14	7	
LS74	14	7	
LS32	14	7	
LS08	14	7	
LS64	14	7	
823129	16	8	
823123	16	8	
7407	14	7	
7406	14	7	
6148	18	9	
4066	14	7	
2716,2732,2764	28	14	
2114	18	9	
IC TYPE	+5V	GND	+11V
PIN NO.			

NOTICE TO ALL PERSONS RECEIVING THIS DRAWING
CONFIDENTIAL. Reproduction, including without the specific written permission of Atari, Inc., is prohibited. This drawing is and remains the property of Atari, Inc. and all information shown hereon is subject to proprietary rights. Neither receipt nor possession thereof confers or transfers any right in or to it or to the use of the subject matter of the drawing or any design or know-how of which it is evidence. Except as may be otherwise expressly agreed upon in writing by Atari, Inc., and the manufacture under the copyright laws, no part of this drawing may be reproduced or used in any manner without the written permission of Atari, Inc. In the event that such permission is granted, any reproduction must bear such boilerplate notice as Atari, Inc. may demand. Atari, Inc. reserves the right to make changes in this drawing at any time without notice.

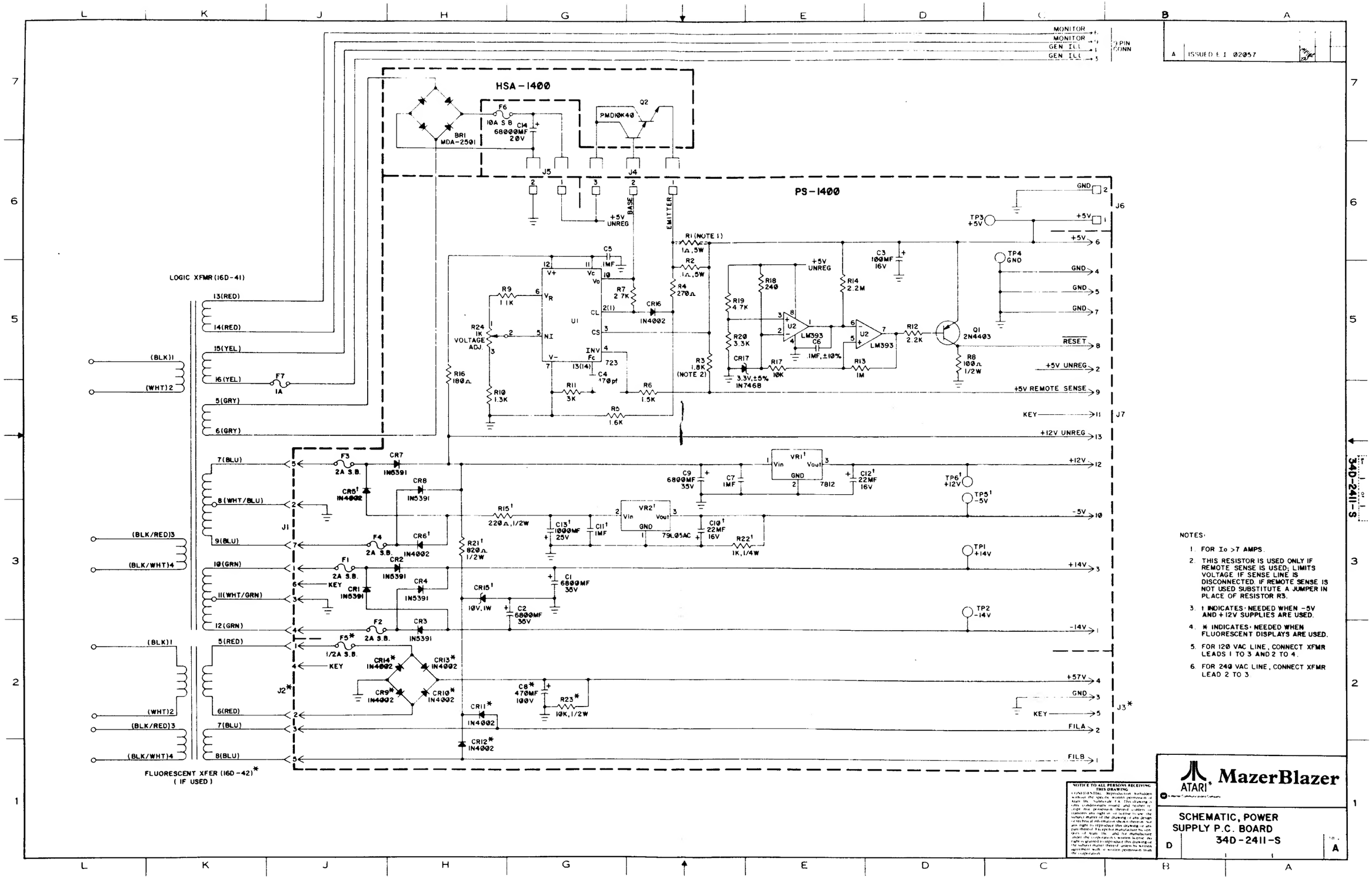

NOTES:

1. FOR Io >7 AMPS.
2. THIS RESISTOR IS USED ONLY IF REMOTE SENSE IS USED; LIMITS VOLTAGE IF SENSE LINE IS DISCONNECTED. IF REMOTE SENSE IS NOT USED SUBSTITUTE A JUMPER IN PLACE OF RESISTOR R3.
3. † INDICATES: NEEDED WHEN -5V AND +12V SUPPLIES ARE USED.
4. * INDICATES: NEEDED WHEN FLUORESCENT DISPLAYS ARE USED.
5. FOR 120 VAC LINE, CONNECT XFMR LEADS 1 TO 3 AND 2 TO 4.
6. FOR 240 VAC LINE, CONNECT XFMR LEAD 2 TO 3.

ATARI® MazerBlazer

SCHEMATIC, POWER SUPPLY P.C. BOARD

D 34D-2411-S A

34D-2411-S

REVISIONS				
SYM	DESCRIPTION	BY / DATE	CHK DATE	APPD DATE
A	ISSUED E.I. 02489			

AC HI
AC LOW
EARTH GND
3 AMP S.B.
INTERLOCK SWITCH (ON DRAWER)
.001MF
.001MF
VARISTOR
AC FILTER
BLOWER FAN
POWER SWITCH
TO FLUORESCENT LAMP
INTERLOCK SWITCH (CABINET)

NOTES

FOR 120 VAC LINE, CONNECT XFMR LEADS 1 TO 3 AND 2 TO 4

FOR 240 VAC LINE, CONNECT XFMR LEAD 2 TO 3.

POWER XFMR 16D-41
1.5 AMP S.B.
10 AMP S.B.
VOLUME CONTROL 2.5K
HSA-1400
PS-1400
+5V@20A
J1 7 PIN .156 CTRS
J2 2 PIN MNL
J3 3 PIN MNL
J4 3 PIN MNL
J5 2 PIN MNL
J6 2 PIN MNL
J7 15 PIN .156 CTRS

KEY
-14V
+5V UNREG
+14V
RESET
+12V UNREG
GND
+5V
GND
GND
SENSE
+5V
GND

AMPLIFONE RGB MONITOR
MATSUSHITA RGB MONITOR

V Sync
H Sync
GND
CSYNC
BLUE
GREEN
RED

CRF-1001
J1 8 PIN .156 CTRS RIBBON
J2 8 PIN .156 CTRS
J3 5 PIN .156 CTRS
J4 5 PIN .156 CTRS
J5 8 PIN .156 CTRS
J6 11 PIN .156 CTRS

GND
+12V UNREG
+14V
-14V
SPKR
VCTL
+5V

VSB-2000
J1 25 PIN .156 CTRS RIBBON
J2 8 PIN .156 CTRS

GND
+12V UNREG
+14V
-14V
SPKR
+5V
VCTL

CARD CAGE

CFB-1000
J1 25 PIN .156 CTRS RIBBON
J2 25 PIN .156 CTRS RIBBON
J3 13 PIN .156 CTRS

GND
CSYNC
BLUE
GREEN
RED
+5V
KEY KEY

ZPU-2000
J1 25 PIN .156 CTRS RIBBON
J2 25 PIN .156 CTRS RIBBON
J3 7 PIN .156 CTRS
J4 5 PIN .156 CTRS
J5 8 PIN .156 CTRS
J6 12 PIN .156 CTRS

KEY
GND
RESET
+5V UNREG
+5V

STB3
STB5
STB6
STB7
BIT0
BIT1
BIT2
BIT3
BIT4
BIT5
BIT6
BIT7
COIN CNTR

SERVICE SWITCH (IF USED)
N.O
COMM
N.C
IN4004

44 BULBS (8)

UIB-1000
J1 16 PIN .156 CTRS
J2 4 PIN .156 CTRS
J3 4 PIN .156 CTRS
J5 16 PIN .156 CTRS
J6 16 PIN .156 CTRS
J7 16 PIN .156 CTRS

STB5
STB6
STB7
D0
D1
D2
D3
D4
D5
D6
D7

PLAYER 1
PLAYER 2
FIRE
FIRE
GUN ASSEMBLY
HORIZ.
VERT.

8" SPEAKER
THUMPER
#44 BULB
#44 BULB
COIN DOOR ASSEMBLY
IN4004
COIN 2
COIN 1
12V COUNTER

NOTICE TO ALL PERSONS RECEIVING THIS DRAWING
CONFIDENTIAL! Reproduction forbidden without the specific written permission of Atari Inc., Sunnyvale, CA. This drawing is and contains unpublished and confidential information proprietary to Atari Inc. and is not to be disclosed to others for any purpose without the specific written permission of Atari Inc., Sunnyvale, CA. Atari Inc. and its manufacturing vendors shall not be liable for errors contained herein or for incidental or consequential damages in connection with the furnishing, performance or use of this material. This drawing and all information shown thereon are the property of Atari Inc. and are not to be reproduced, published or used in any manner without the prior written permission of Atari Inc.

ATARI
MazerBlazer
NAME
MAZER/BLAZER WIRING DIAGRAM
DWG SIZE D
PART NO 340-181-WD
REV A
SHEET 1 OF 1

340-181-WD